NO.	REVISIONS	DATE	DEVISER
1.			
2.			
3.			

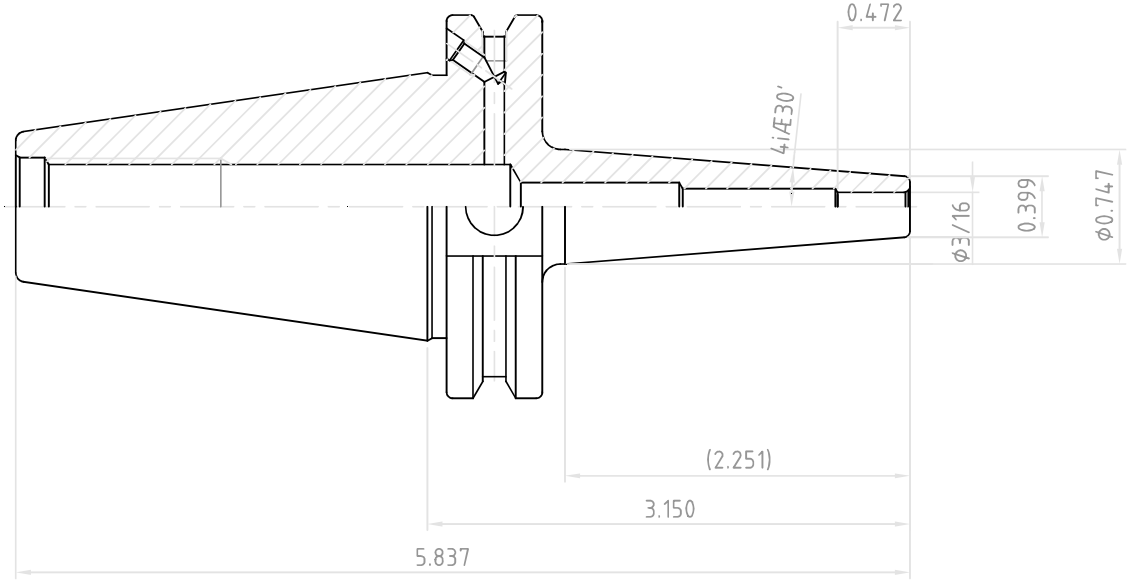

YG-1 CO., LTD.	SSK CONTROL NUMBER		
	CAT40AD/B-SFH3/16(4.763)-3.15(80)		
	EDP No. VK022	SCALE	1 : 1