NO.	REVISIONS	DATE	DEVISER
1.			
2.			
3.			

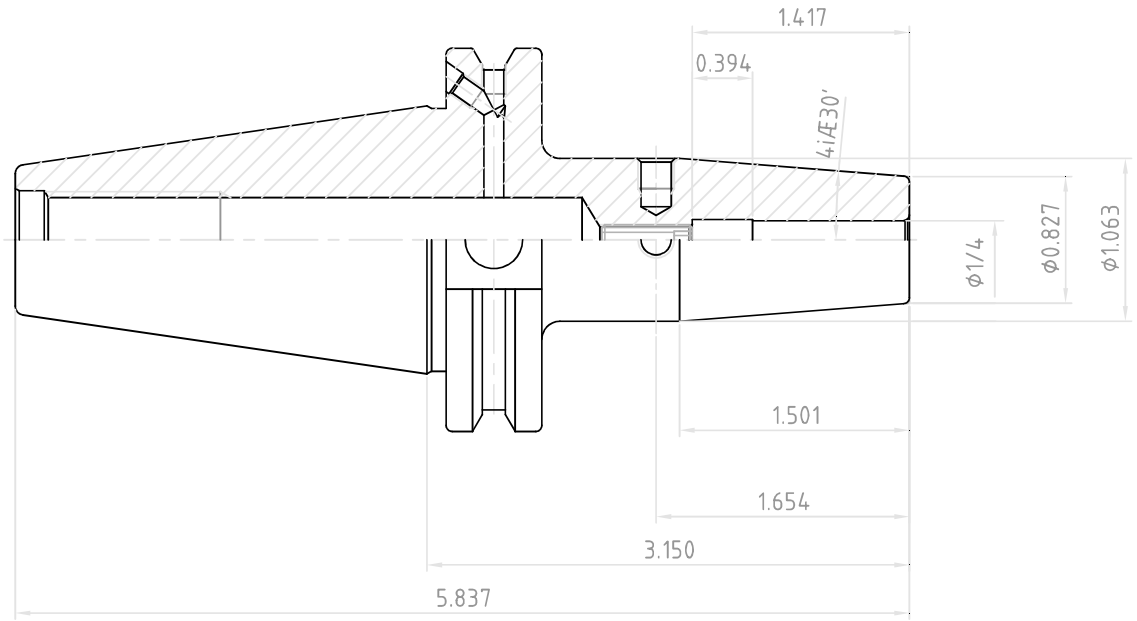

	SSK CONTROL NUMBER		
YG-1 CO., LTD.	CAT40AD/B-SFH1/4(6.350)-3.150(80)		
	EDP No. VK024	SCALE	1 : 1