NO.	REVISIONS	DATE	DEVISER
1.			
2.			
3.			

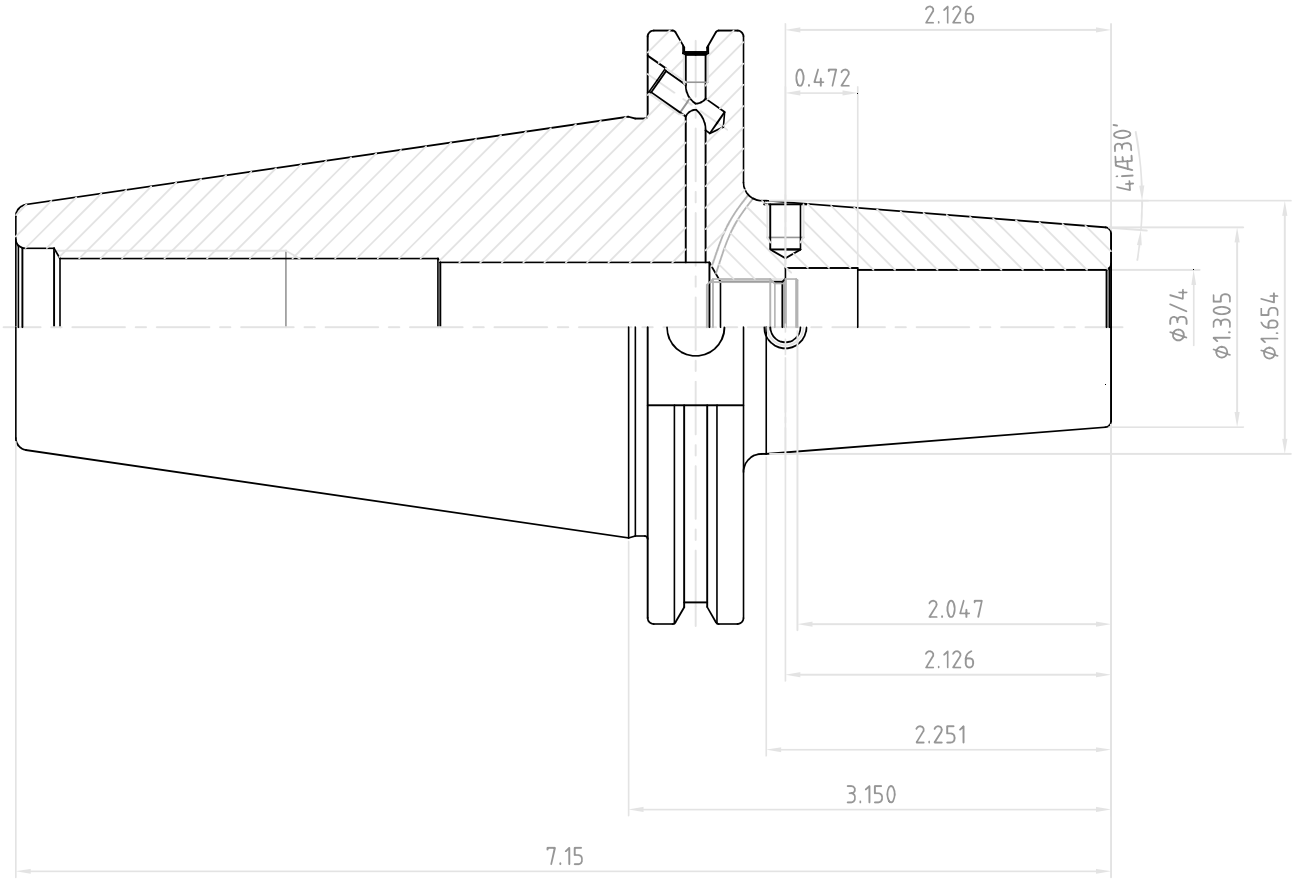

YG-1 CO., LTD.	SSK CONTROL NUMBER		
	CAT50AD/B-SFH3/4(19.050)-3.150(80)		
	EDP No. VL040	SCALE	1 : 1