NO.	REVISIONS	DATE	DEVISER
1.			
2.			
3.			

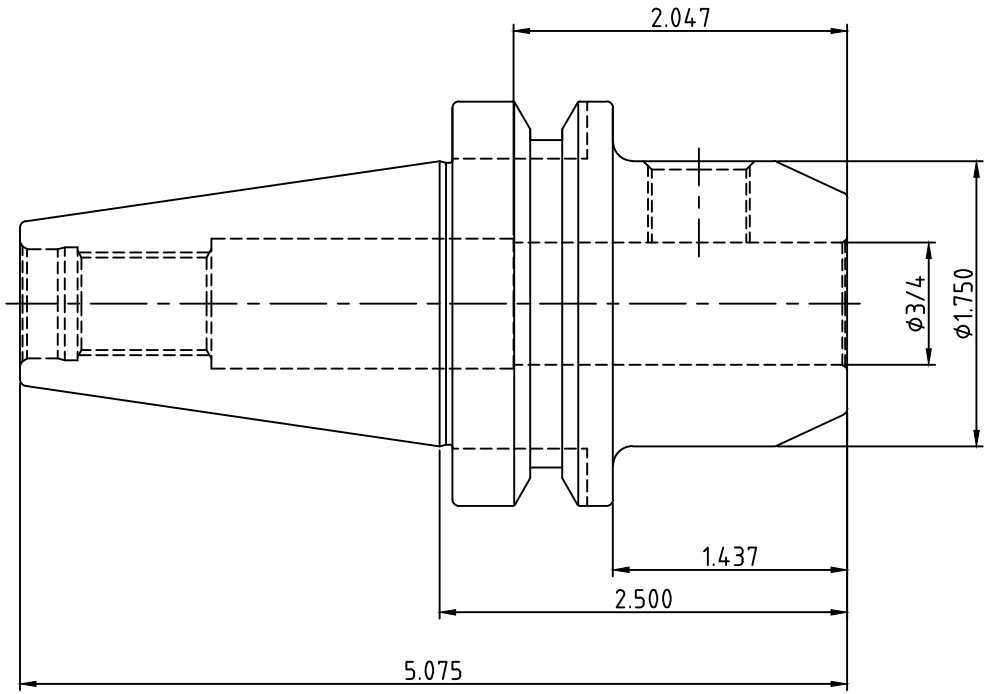

YG-1 CO., LTD.	DESCRIPTION		
	BT40-EMH3/4(19.05)-2.50(63.5)		
	EDP No.	AH010B25	SCALE 1 : 1