| NO. | REVISIONS | DATE | DEVISER |
|---|---|---|---|
| 1. | | | |
| 2. | | | |
| 3. | | | |

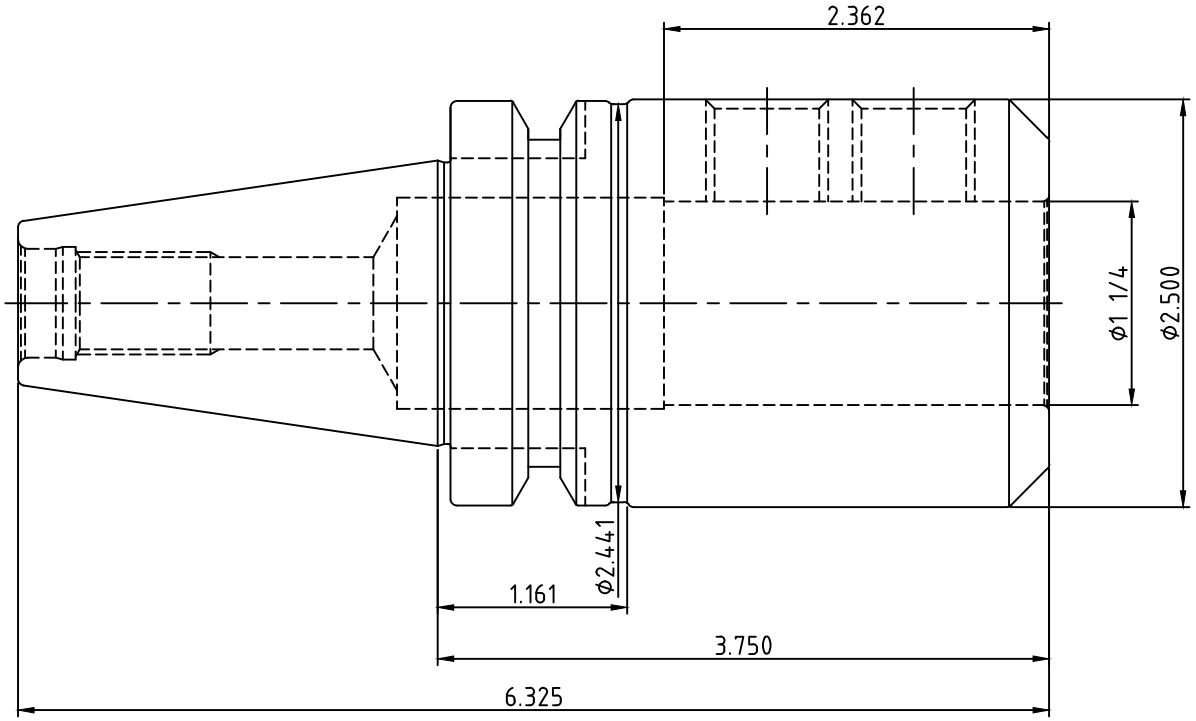


| | | | |
|---|---|---|---|
| YG-1 CO., LTD. | DESCRIPTION | | |
| | BT40-EMH1 1/4(31.75)-3.75(95.25) | | |
| | EDP No. AH017B25 | SCALE | 1 : 1 |