NO.	REVISIONS	DATE	DEVISER
1.			
2.			
3.			

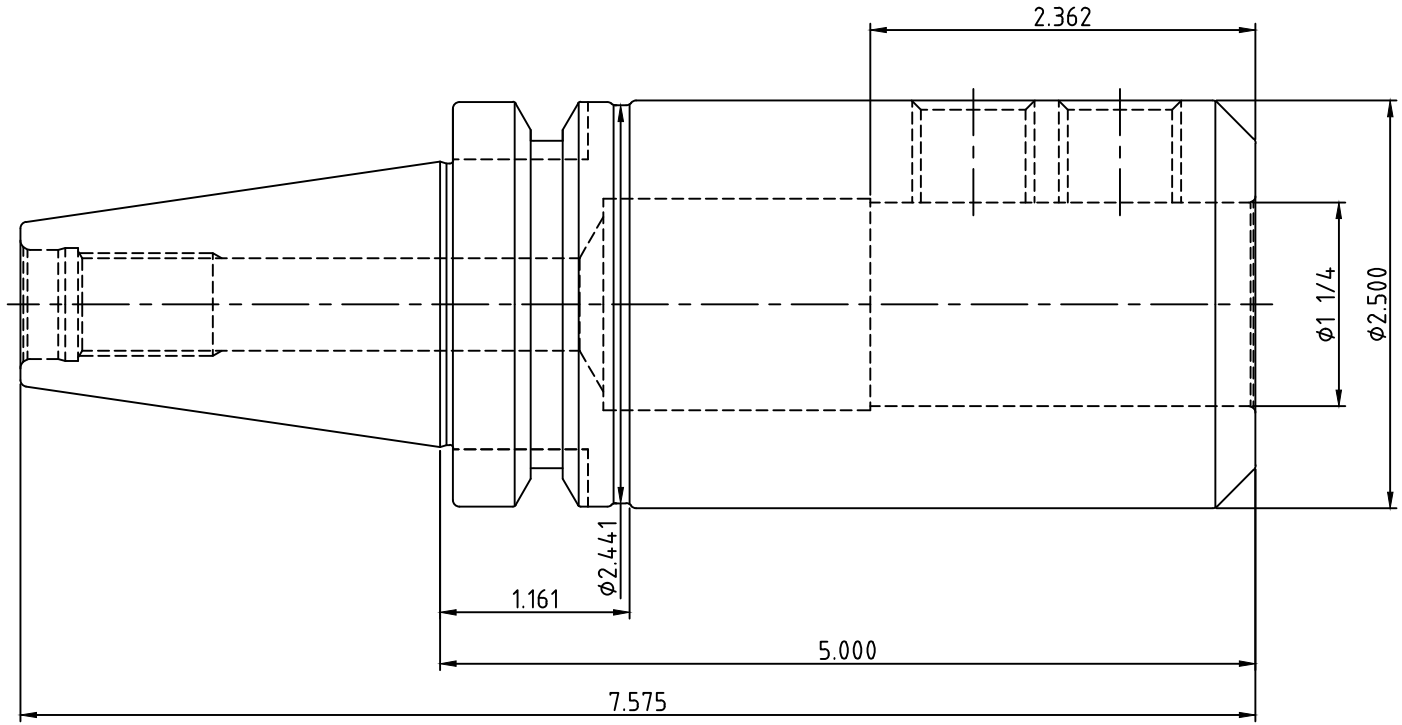

YG-1 CO., LTD.	DESCRIPTION		
	BT40-EMH1 1/4(31.75)-5.00(127)		
	EDP No.	AH117B25	SCALE 1 : 1