NO.	REVISIONS	DATE	DEVISER
1.			
2.			
3.			

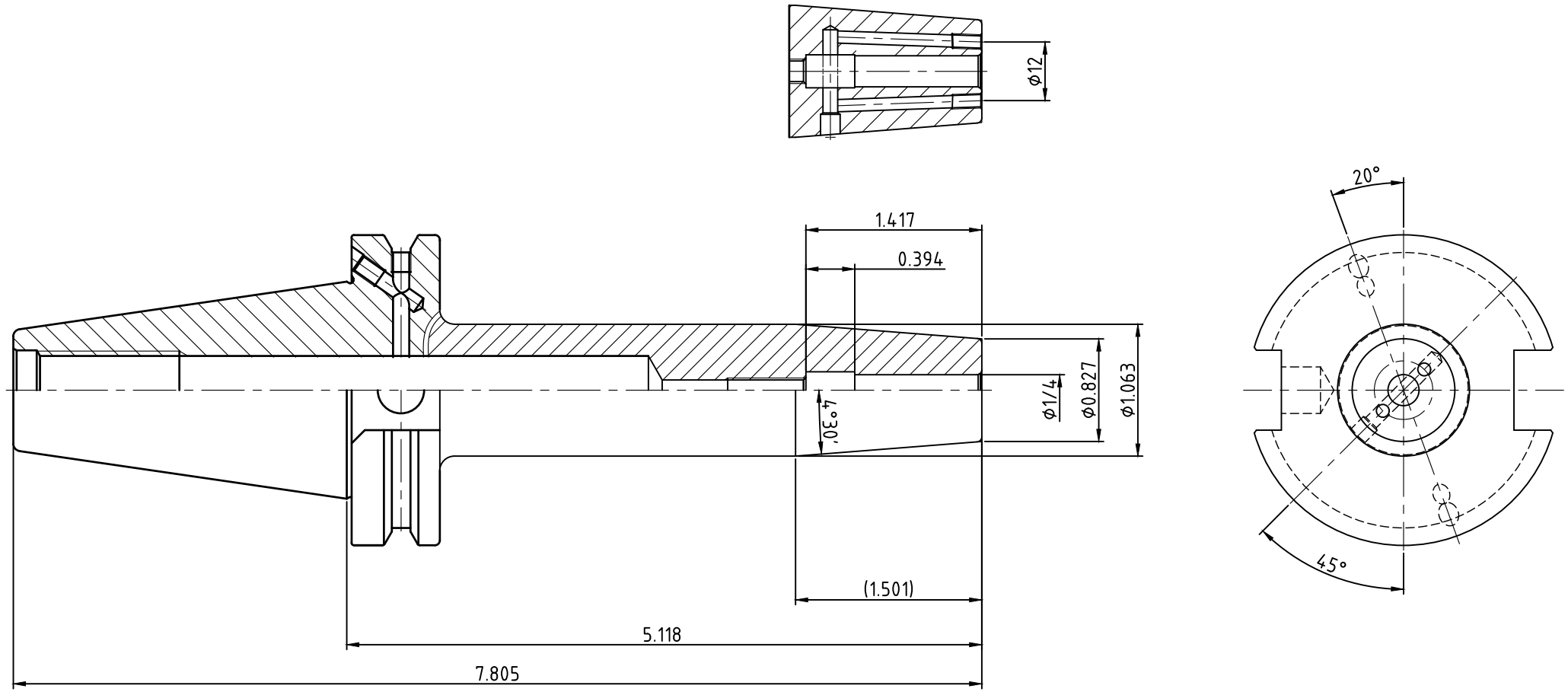

YG-1 CO., LTD.	SSK CONTROL NUMBER		
	CCT40AD/B-SFH6.35(1/4")CR-130(5.12")		
	EDP No.	VB203JR	SCALE 1 : 1