NO.	REVISIONS	DATE	DEVISER
1.			
2.			
3.			

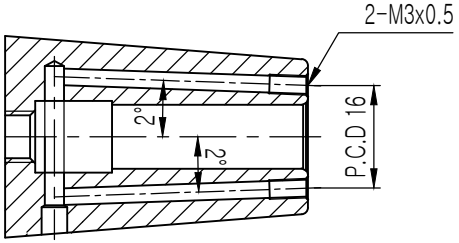

SECTION A'-A

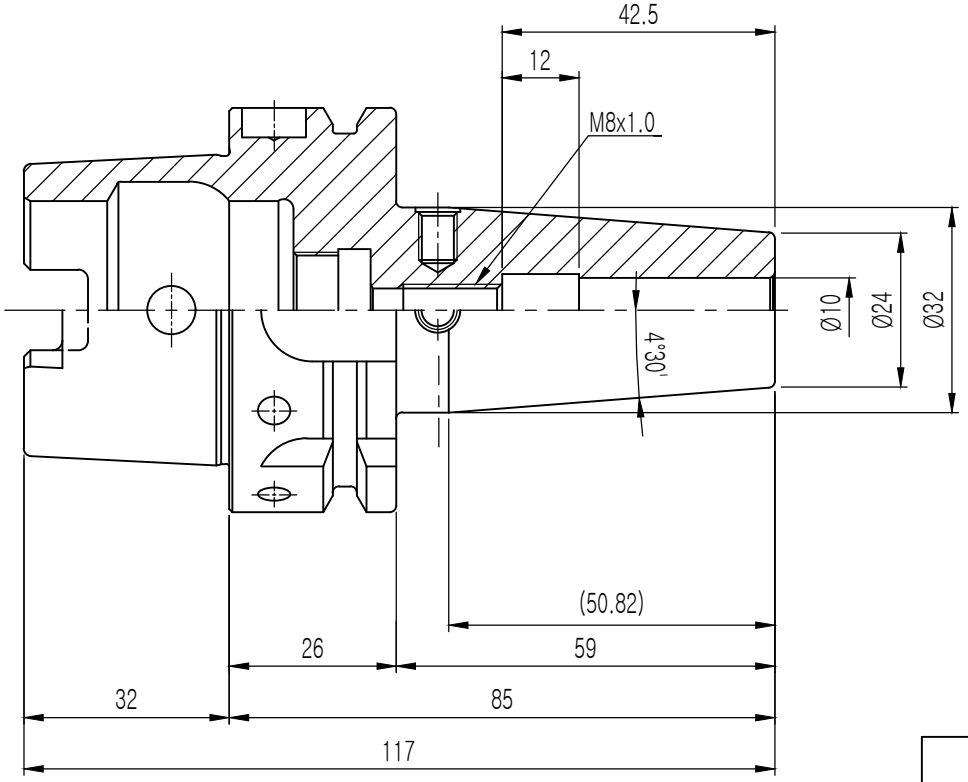

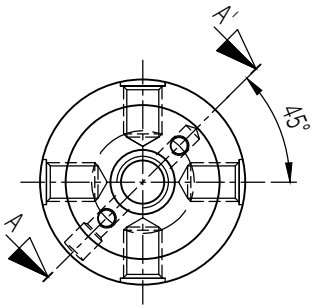

YG-1 CO., LTD.	DESCRIPTION		
	HSK63A-SFH10CR-85		
	EDP No.	VQ114JR	SCALE 1 : 1